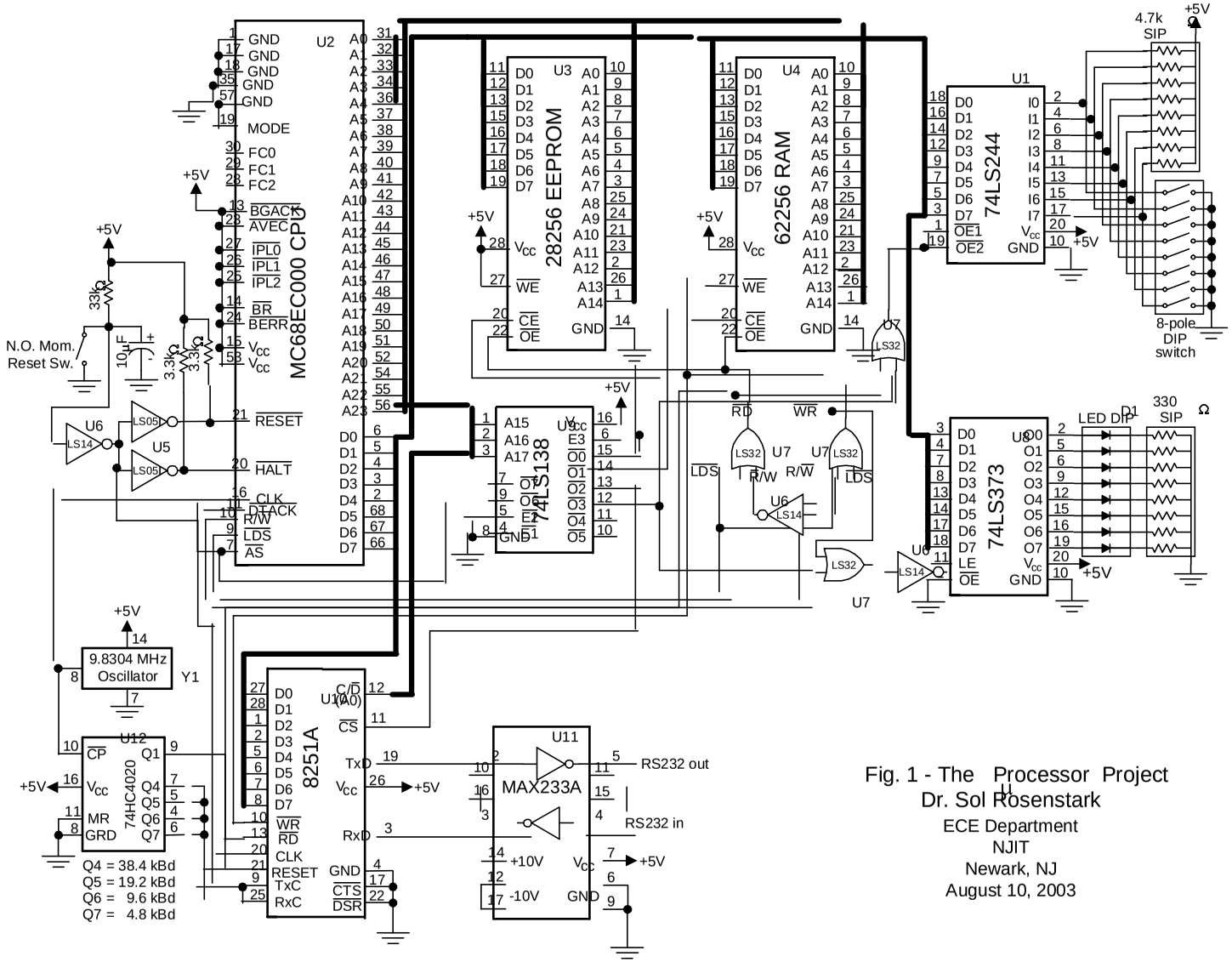

Fig. 1 - The Processor Project

Dr. Sol Rosenstark
ECE Department
NJIT
Newark, NJ
August 10, 2003